makita

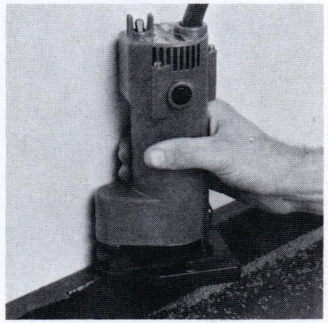

Trims installed backsplash

The unique base design and offset drive spindle allows trimming of ⅝″ installed backsplash.

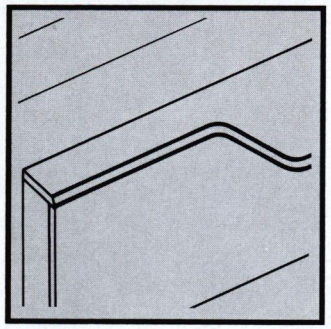

Trimming ⅝″ vertical backsplash

The 3705 is capable of trimming the front edge of an installed ⅝″ vertical backsplash when fitted with a Makita solid carbide self-piloting bit.

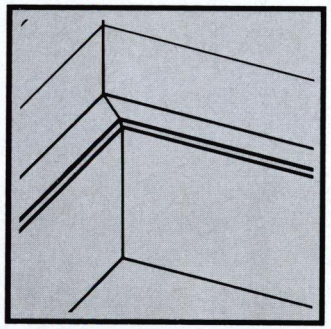

Trimming in and out of installed corners

The unique base design allows trimming into and out of installed backsplash corners with little or no hand trimming necessary. The use of a Makita self-piloting trimmer bit (optional accesory) insures fast, efficient trimming and a clean, high quality finish.

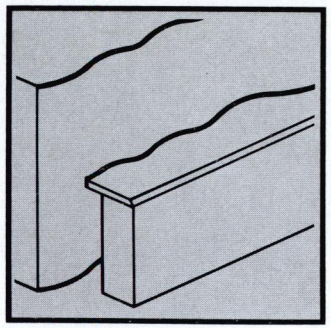

Scribing of post formed backsplash to wall

Accurately scribes the back edge of post formed backsplash. The self-piloting bit (optional accessory) follows every trimmer movement as it is guided against the wall creating an exact reproduction of the wall surface. The trimmed portion is then pushed against the wall and mated exactly.

makita

¼″ Offset Base Laminate Trimmer Model 3705

ACCESSORIES

Description	Part #
Collet Cone Size: ¼″	763608-8
Trimmer Shoe	122248-5
Guide Holder	122281-7
Trimmer Guide For fine trimming of furniture surfaces.	163162-6
Straight Guide	314947-2
Hex Wrench #6	783204-6
Templet Guide A: 5/16″ B: 25/64″ C: 5/16″	321912-7
Spanner Wrench #10 #17	781003-0 781008-0

step up to makita

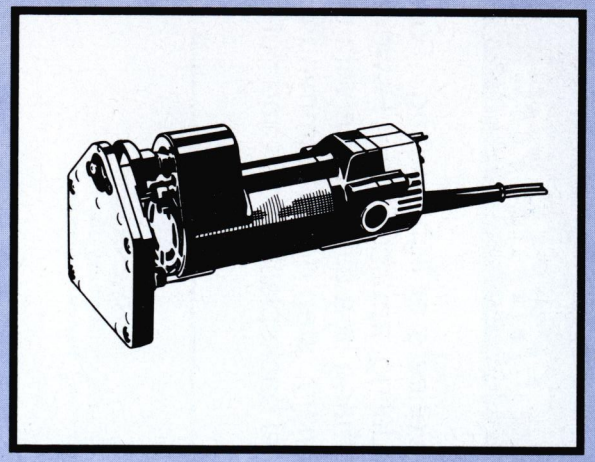

Laminate Trimmer

Model 3705

AVAILABLE AT:

Laminate Trimmer, Model 3705

For trimming laminates and veneers or light routing. For production, custom installation or remodeling applications. Powerful 3.8 AMP motor removes laminate overhang in a single pass with smooth chip-free results. No need for primary "step down" trimming or secondary filing. Ideal for trimming vertical backsplash and in and out of corners.

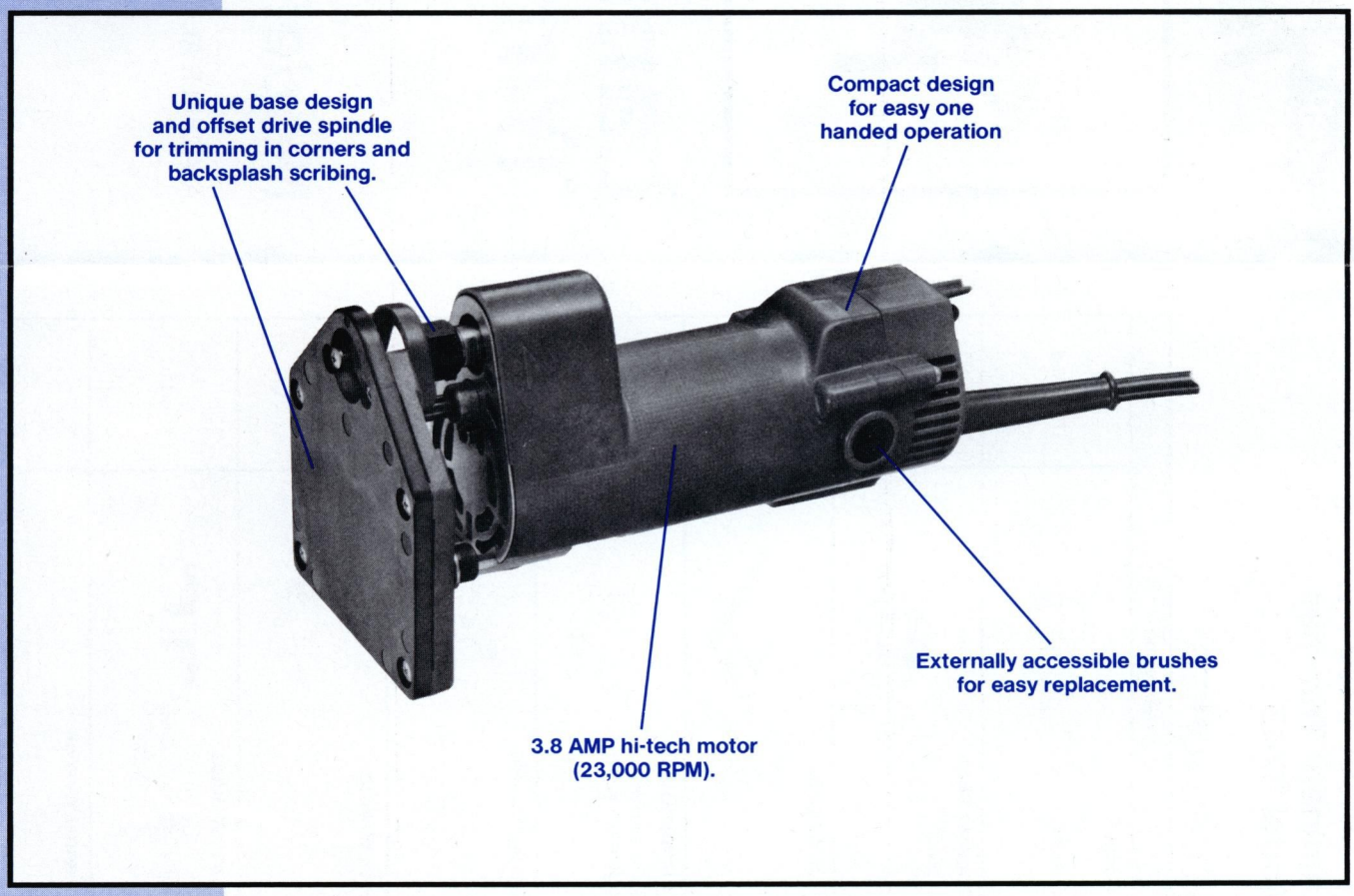

Outstanding Features:

- double insulated for operator safety
- 3.8 AMP hi-tech motor (23,000 RPM) for fast, smooth trimming and light routing applications
- unique base design and offset drive spindle allow trimming in corners and backsplash scribing
- simple depth adjustment with just one wrench
- compact design for easy one handed operation
- weighs only 4 lbs. for increased maneuverability and less operator fatigue
- externally accessible brushes for easy inspection and replacement

★ a wide variety of optional accessories available for diverse job applications

STANDARD EQUIPMENT

wrench #10 (781003-0), wrench #17 (781008-0), templet guide (321912-7)

step up to makita

Model	Chuck Capacity	No Load Speed	AMPS (115V)	Overall Height	Net Weight	Shipping Weight
3705	¼″	23,000 RPM	3.8	8 7/16″	4.0 lbs.	4.5 lbs.